BuildMath

Stairs - Exposed stringer

One worked example, with the maths behind each result - follow it in the app and check it by hand.

© Robert Butwell 2026

Stringer Types

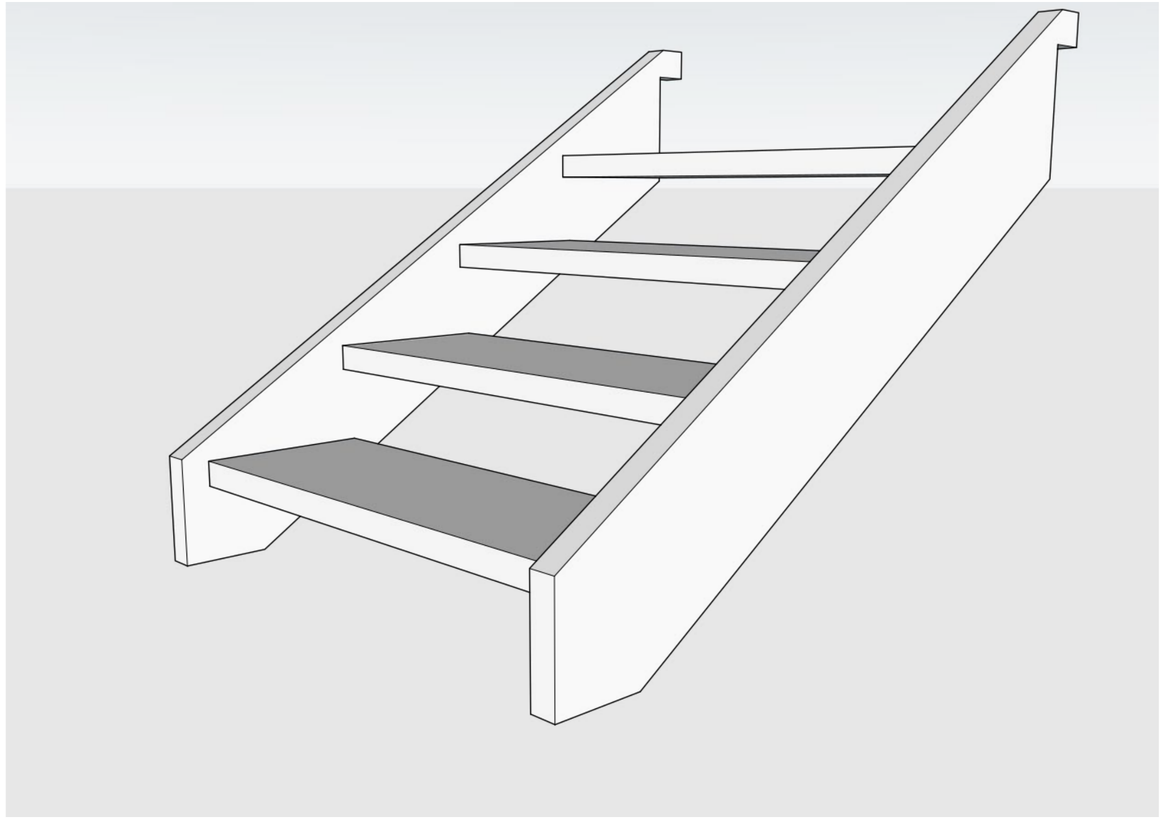

Exposed Stringer

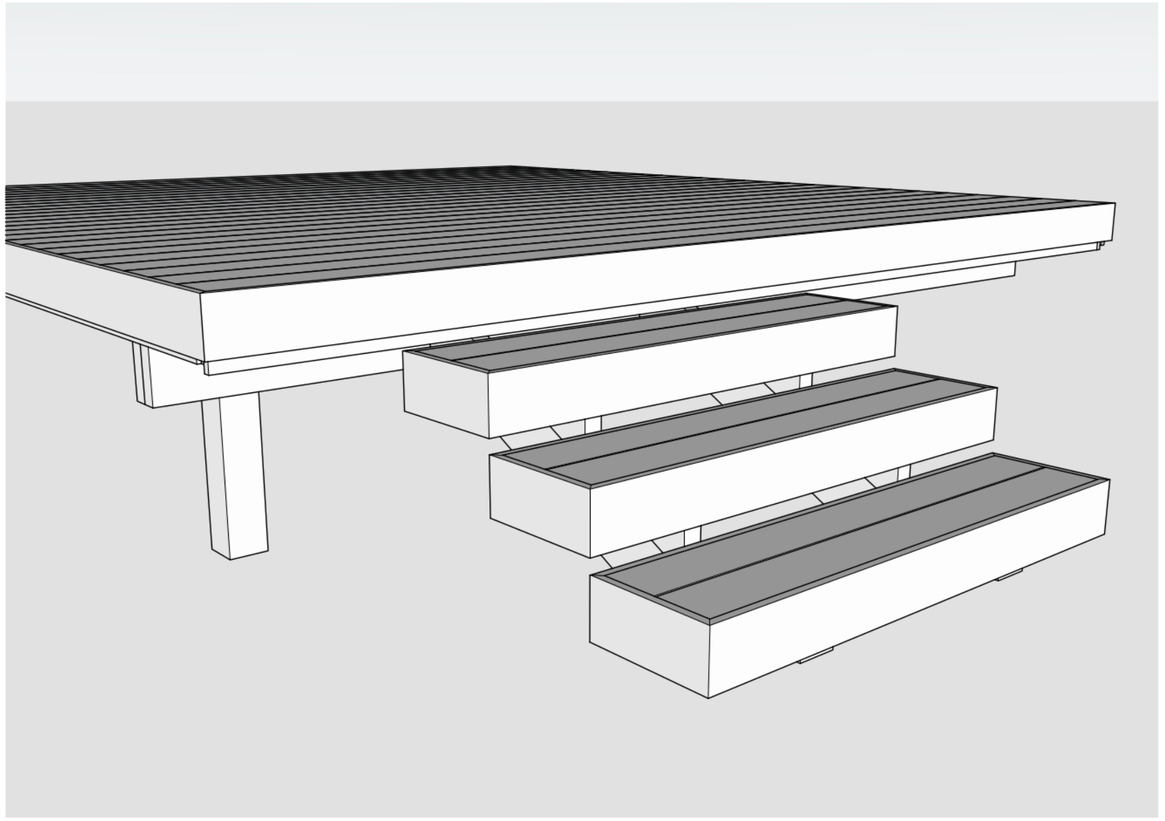

Concealed Stringer

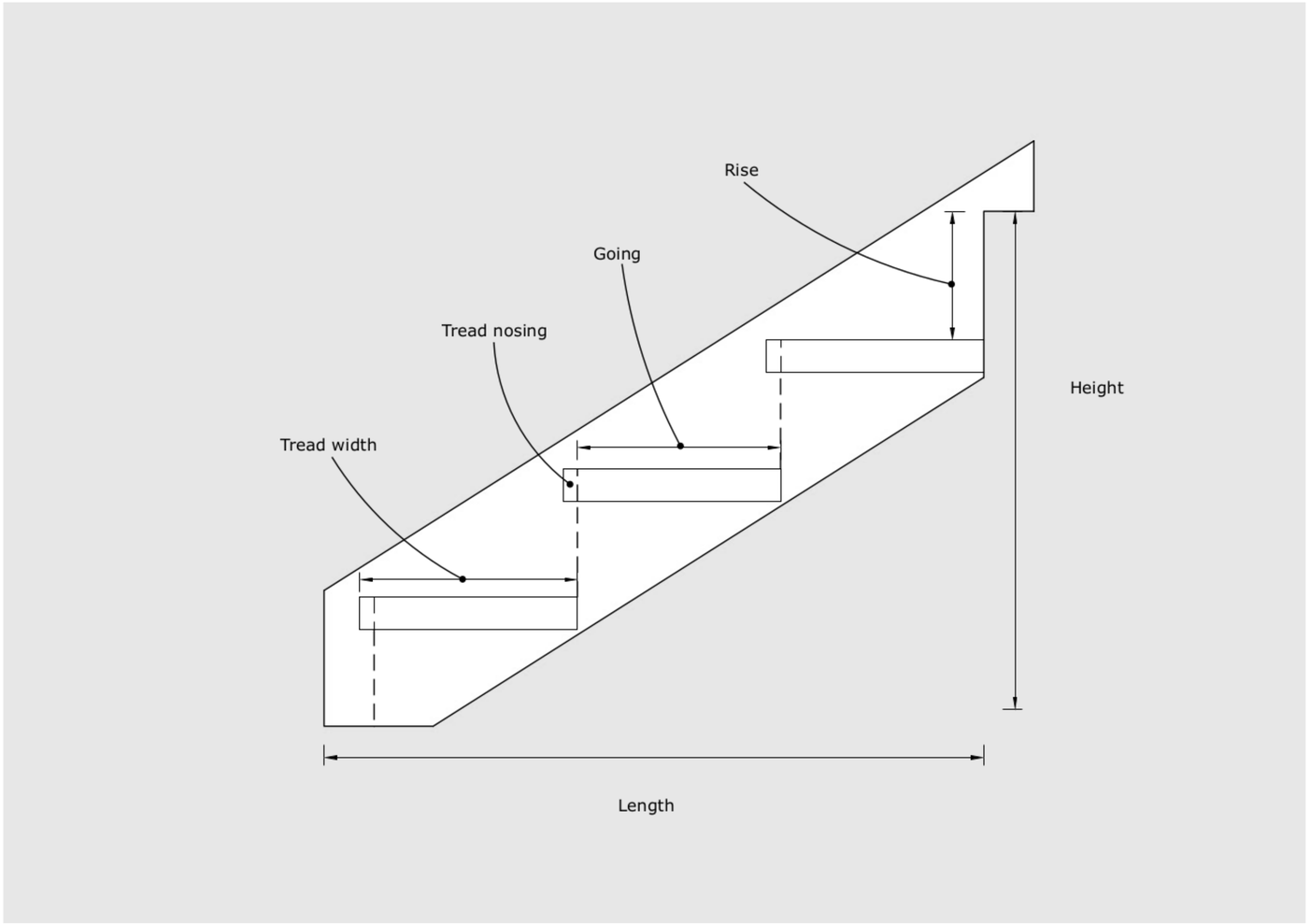

Stairs - Exposed stringer gives the rise, going, angles and a full stringer markout for a stair with the treads between the stringers.

Number of rises = height ÷ target rise, rounded up

Rise = height ÷ number of rises

Going = (length – nosing) ÷ (number of rises – 1)

Note:
For treads that sit on top of the stringers use Stairs - Concealed stringer.

Inputs



Choose Fixed Length or Fixed Tread
Fixed Length here - the stair fits a set length and the tread width changes to suit. Fixed Tread keeps the tread width and the length changes.

Enter the values

Length	923 - top finished face to the stringer end.
Height	720 - the overall height to divide.
Target Rise	180 - the step height you want.
Tread Nosing	20 - tread overhang on the one below.
Stringer Nosing	35 - tread front to stringer edge.
Stringer Horn	70 - past the deck or landing at the top.
Stringer extension	50 - past the bottom nosing, off the Length.
Tread thickness	45 - sets the narrowest stringer.

The next page shows where each one is measured.

Entering values, saving configs and projects: see Build Math - the basics.

Input Descriptions

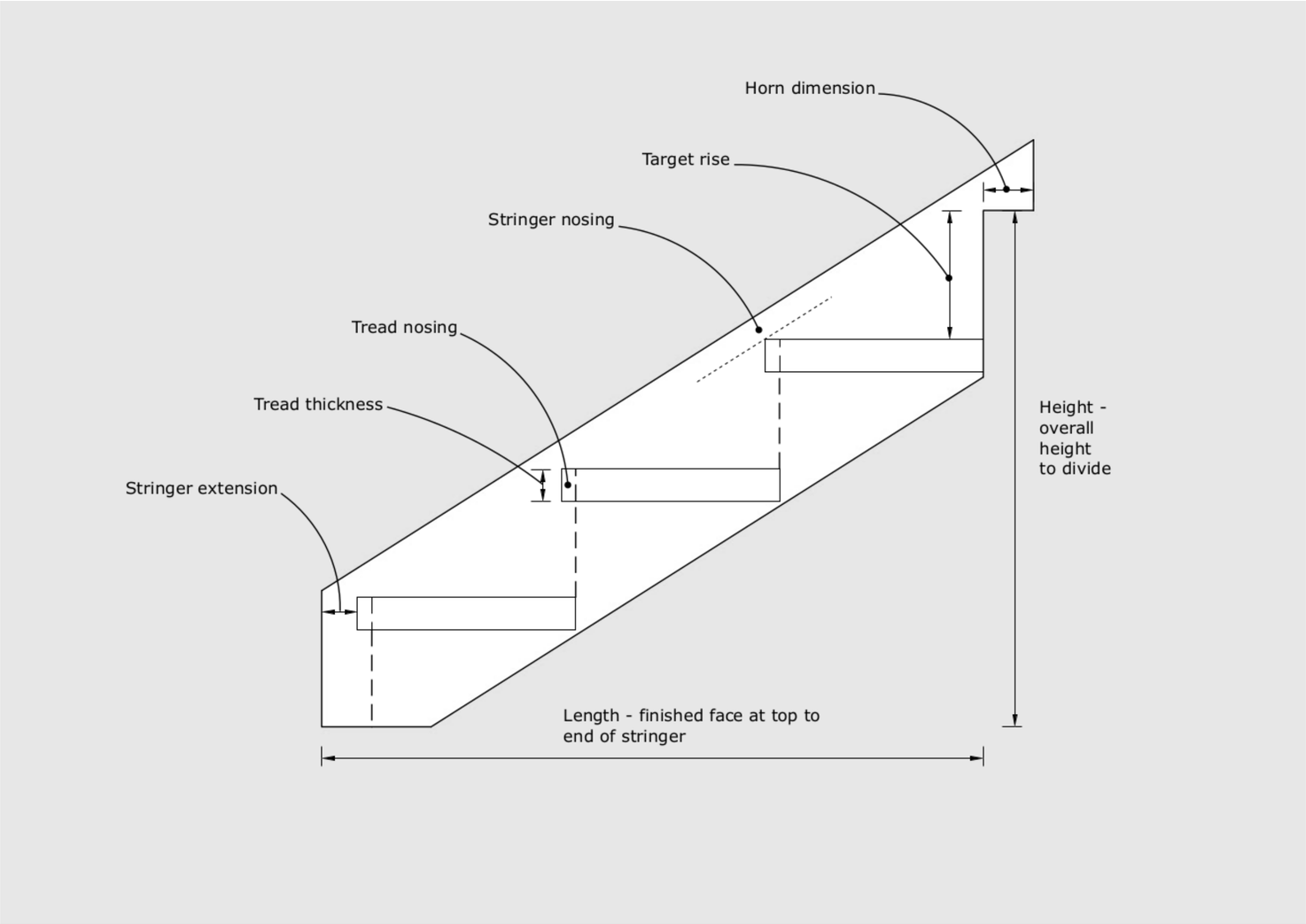

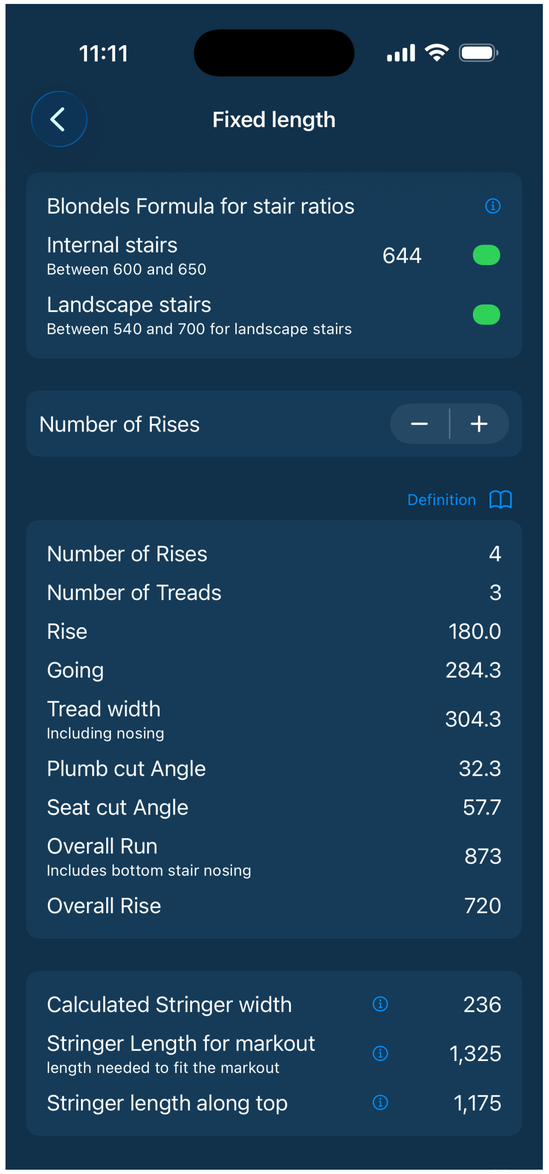

Results

Number of Rises	720 ÷ 180 = 4
Rise	720 ÷ 4 = 180.0
Number of Treads	4 – 1 = 3
Going	(923 – 50 – 20) ÷ 3 = 284.3 - the 50 extension comes off the length first.
Tread width	284.3 + 20 = 304.3 - including nosing.
Overall Run	923 – 50 = 873
Plumb cut Angle	$\tan^{-1}(180 \div 284.3) = 32.3°$
Seat cut Angle	90 – 32.3 = 57.7°

Ratio

2 × 180 + 284.3 = 644 - Blondel's formula, inside the recommended 600 to 650 for internal stairs.

Change the number of rises with + and – and everything recalculates.

The next page shows the stringer and the markout.

Stringer Markout



Stringer

Calculated Stringer width that works.	(180 + 45 + 45.7 ÷ cos(32.34°)) × cos(32.34°) = 236 - the narrowest stringer
Stringer length along top	(923 + 70) ÷ cos(32.34°) = 1175 - the full length, extension included.
Stringer Length for markout	1175.3 + 235.8 × tan(32.34°) = 1325

Setout lines - from the top edge of the stringer

Setout line 1	35 + 20 × sin(32.34°) = 45.7 - the Stringer Nosing line.
Setout line 2	45.7 + 180 × cos(32.34°) = 197.8

Markout - from the top end of the stringer

line 1	70 ÷ cos(32.34°) + 45.7 × tan(32.34°) = 82.8 + 28.9 = 111.8, then + 284.3 ÷ cos(32.34°) = + 336.5 each → 448.3, 784.8, 1121.3
line 2	111.8 + 180 × sin(32.34°) = 208.1, then + 336.5 each → 544.6, 881.1, 1217.6

Connect the points to give the rise and tread lines.

Angle offsets - Stringer width 290

Plumb cut offset	290 × 180 ÷ 284.3 = 183.6 - stringer width × rise ÷ going.
Seat cut offset	290 × 284.3 ÷ 180 = 458.1 - stringer width × going ÷ rise.

The pages after this have more drawings of the markout, in the same order as the app screens.

Read the list out loud: see Build Math - the basics.

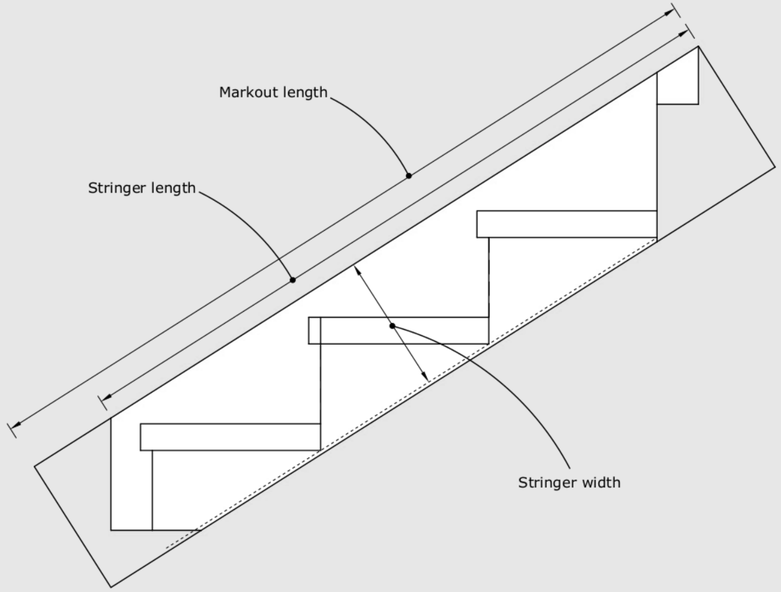
Markout length
Stringer length
Stringer width

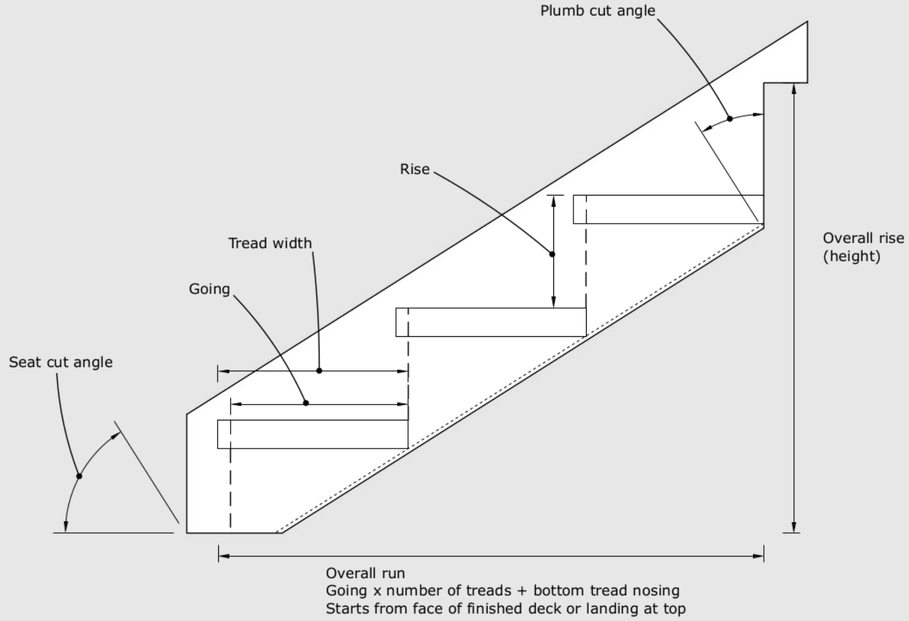
Plumb cut angle
Rise
Tread width
Going
Seat cut angle
Overall rise
(height)
Overall run
Going x number of treads + bottom tread nosing
Starts from face of finished deck or landing at top

Results - Markout section

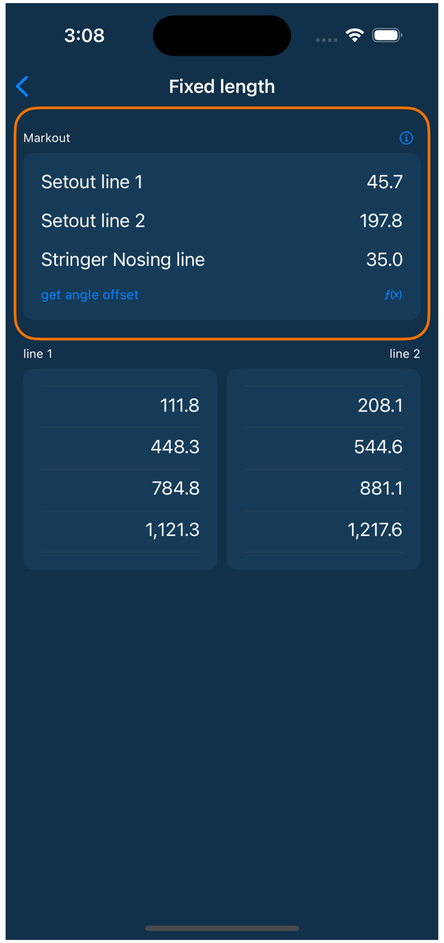

markout section

Using the displayed information, you can mark out your stair in the following way.

Step 1

- Nominate an end to be the top of the stringer and a top edge.
- Make sure the top end is cut square or has a square mark across it, as this is where the tread and rise markout starts from.
- From the top edge, accurately mark a line on the face of the stringer the distance given as **Setout Line 1**.
- Repeat for **Setout Line 2**.
- At this point you could also mark the Stringer Nosing but it's not required and could be confusing.

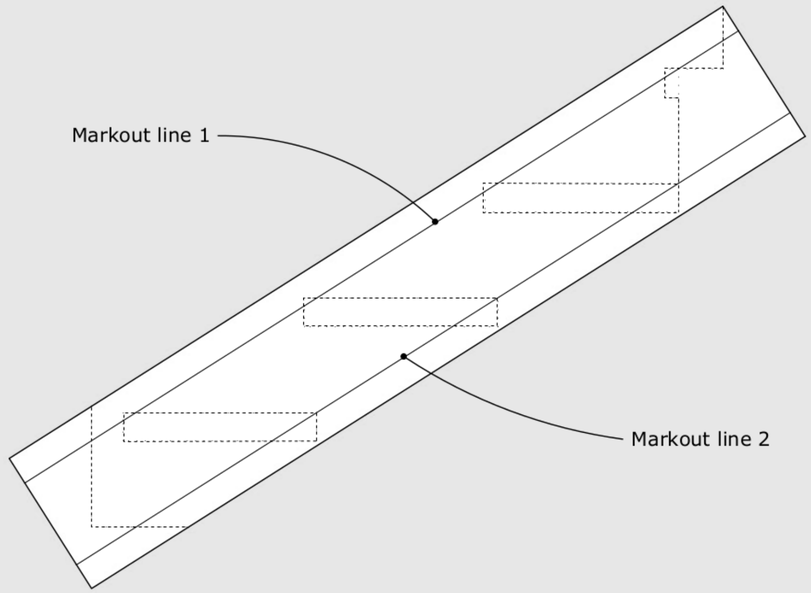

Results - Markout section



markout section

Step 2

- Using the values from the **line 1** table, hook your tape over the top end of the stringer on **Setout line 1** or hold your tape on the line if you drew a square line instead.
- Accurately mark each point along the line.
- Repeat for the values in **line 2** on **Setout line 2**.

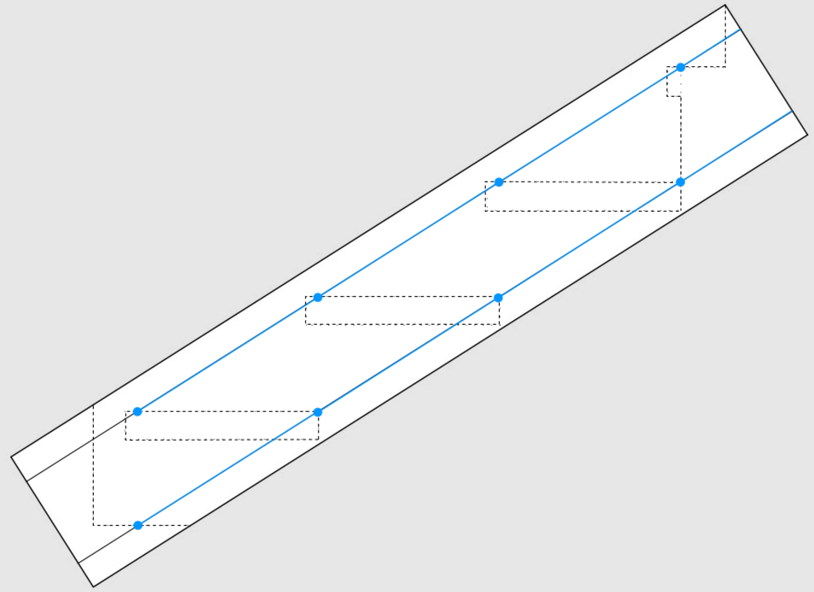

Results - Markout section



markout section

Step 3

- Connect the points vertically and horizontally to create the rise and tread lines.
- Markout your treads using a template block, reduced appropriately to accommodate the pencil width, or other method.
- Mark the ends of the stringer using parallel offsets from the rise and tread marks, bevel or other techniques.
- For very accurate angle marking use get angle offset button, enter your stringer width (measure this accurately to get a more accurate offset) and tap Calculate. The plumb and seat cut offsets will be calculated.

