BuildMath

Rafters

One worked example, with the maths behind each result - follow it in the app and check it by hand.

© Robert Butwell 2026

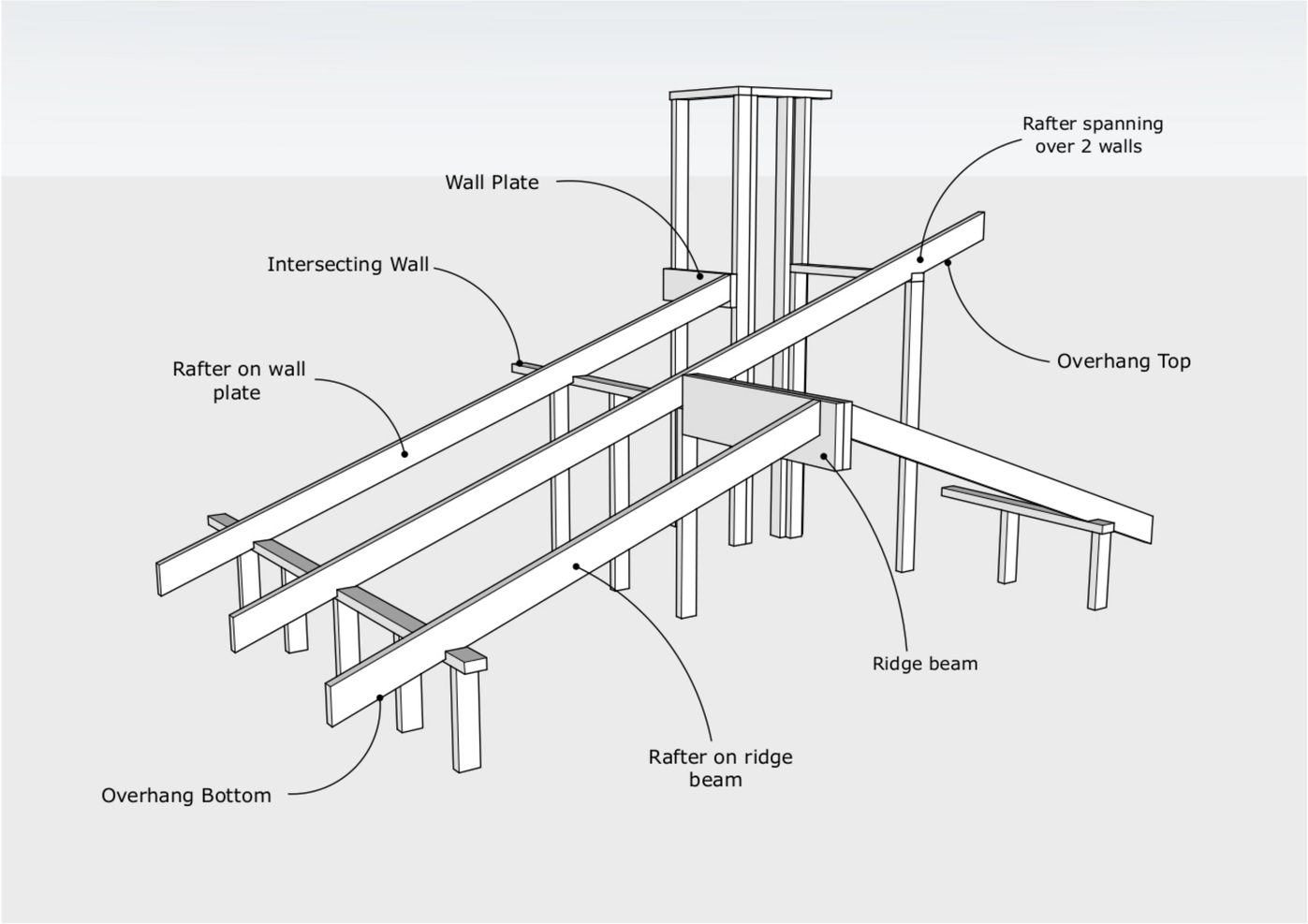

Rafters gives the length, plumb cut and birdsmouth marks for a rafter from a wall to a ridge or plate, or over two walls.

Rafter length =
(length + bottom overhang + top overhang) ÷ cos(angle)

Birdsmouth mark =
(bottom overhang + position) ÷ cos(angle)

Note:
For a hip roof use Hip Roof. To set the wall height under the rafter use Calculate an initial Height.

Inputs

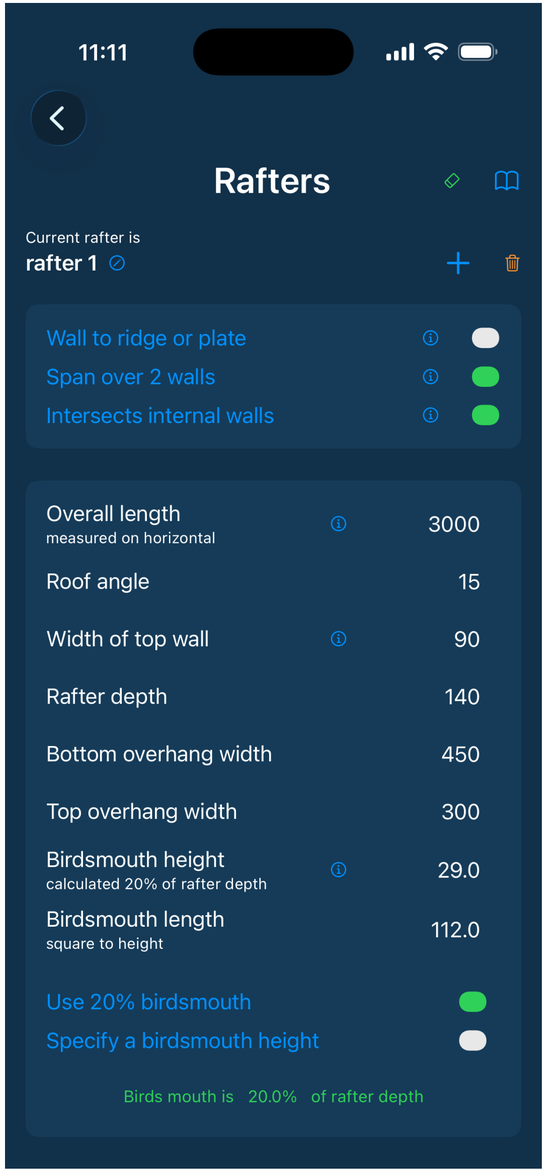

Choose Wall to ridge or plate or Span over 2 walls
Span over 2 walls here - from the outside of the lower wall to the outside of the upper wall. Wall to ridge or plate runs to the face of the ridge or plate, with no top wall or top overhang.

Enter the values

Overall length	3000 - measured on horizontal.
Roof angle	15
Width of top wall	90
Rafter depth	140
Bottom overhang width	450 - level, from the outside of the lower wall.
Top overhang width	300 - level, past the outside of the upper wall.

Birdsmouth
Use 20% birdsmouth - the usual maximum. Choose Specify a birdsmouth height for a smaller one.

Turn on Intersects internal walls and add each wall the rafter crosses:

Wall position	1500 - from the outside of the lower wall.
Wall width	90

Entering values and saving configs: see Build Math - the basics.

Rafter Markout

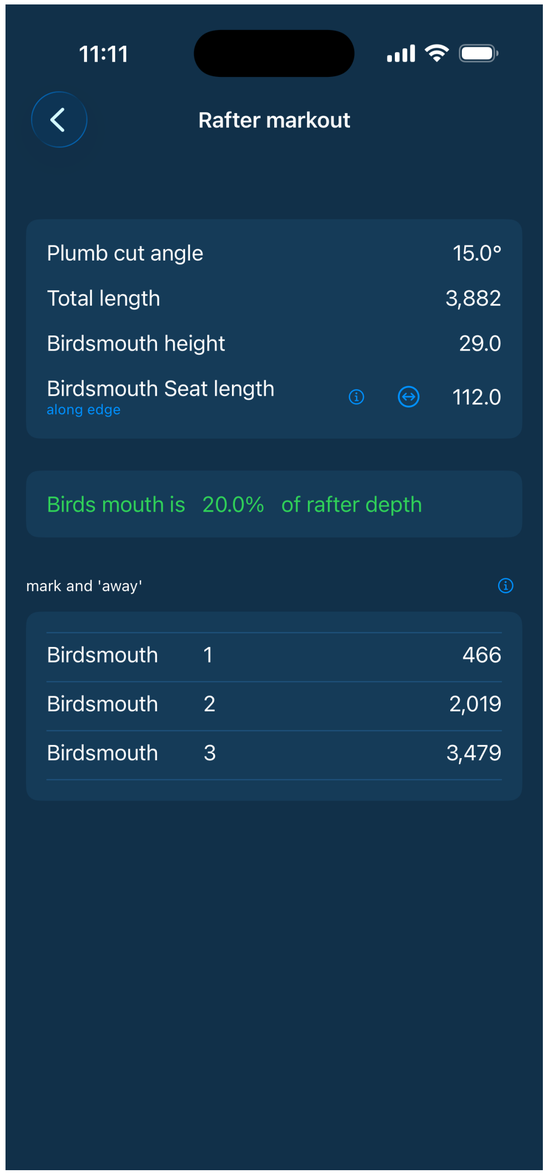

Plumb cut angle 15.0°
Total length (3000 + 450 + 300) ÷ cos(15°) = 3750 ÷ 0.9659 = 3882 - along the edge, cut to cut.

Birdsmouth

Birdsmouth height 140 × 20% ÷ cos(15°) = 28 ÷ 0.9659 = 29.0
Birdsmouth Seat length 29.0 ÷ tan(15°) = 108.2 square to height, ÷ cos(15°) = 112.0 along edge.

Birdsmouth marks - mark and 'away'

Birdsmouth 1 450 ÷ cos(15°) = 466 - over the lower wall.
Birdsmouth 2 466 + 1500 ÷ cos(15°) = 466 + 1553 = 2019 - over the internal wall.
Birdsmouth 3 (450 + 3000 – 90) ÷ cos(15°) = 3479 - over the top wall.

With Wall to ridge or plate the last birdsmouth isn't there - the rafter stops at the ridge or plate.

The next pages show where each length is measured from.

Read the list out loud: see Build Math - the basics.

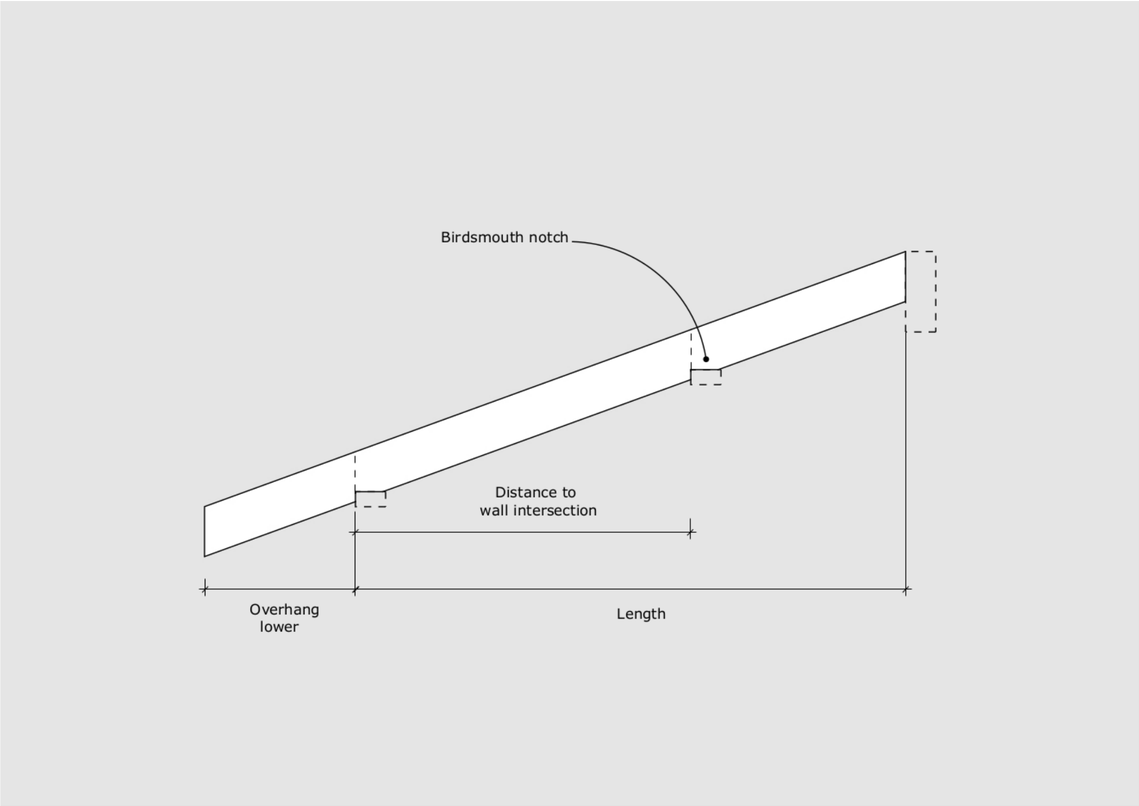

length wall to ridge or wall plate

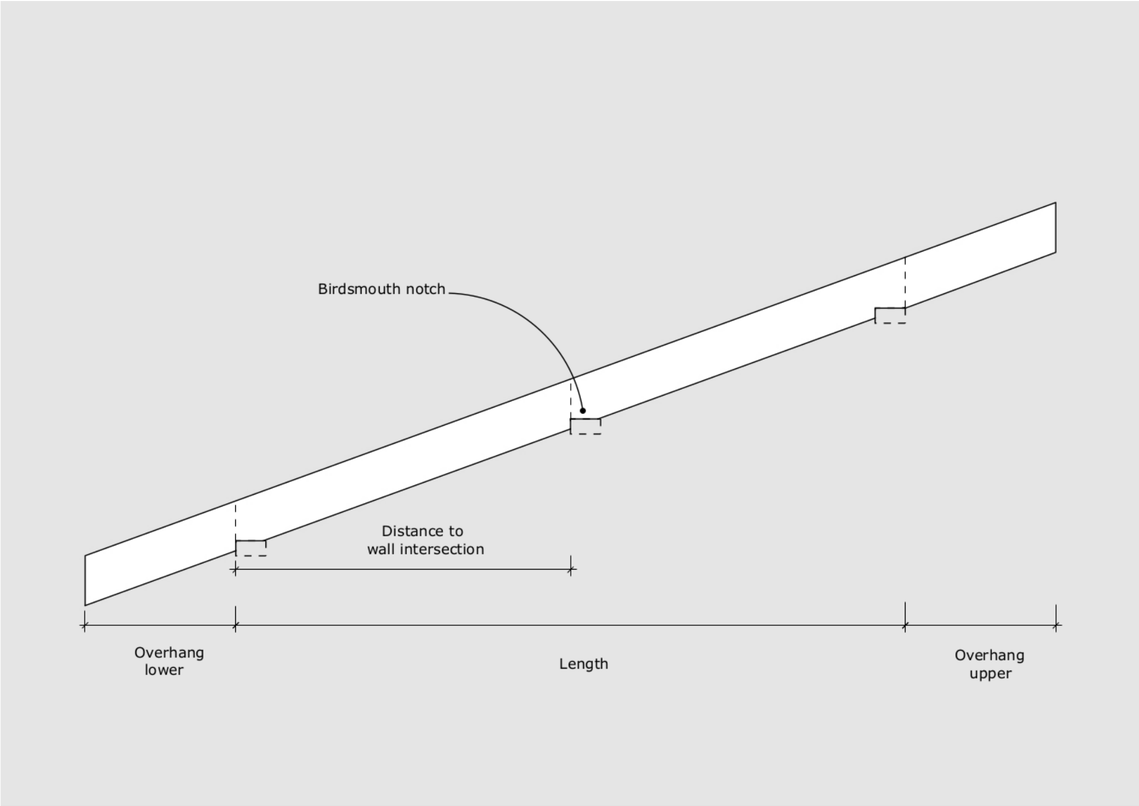

length over 2 walls

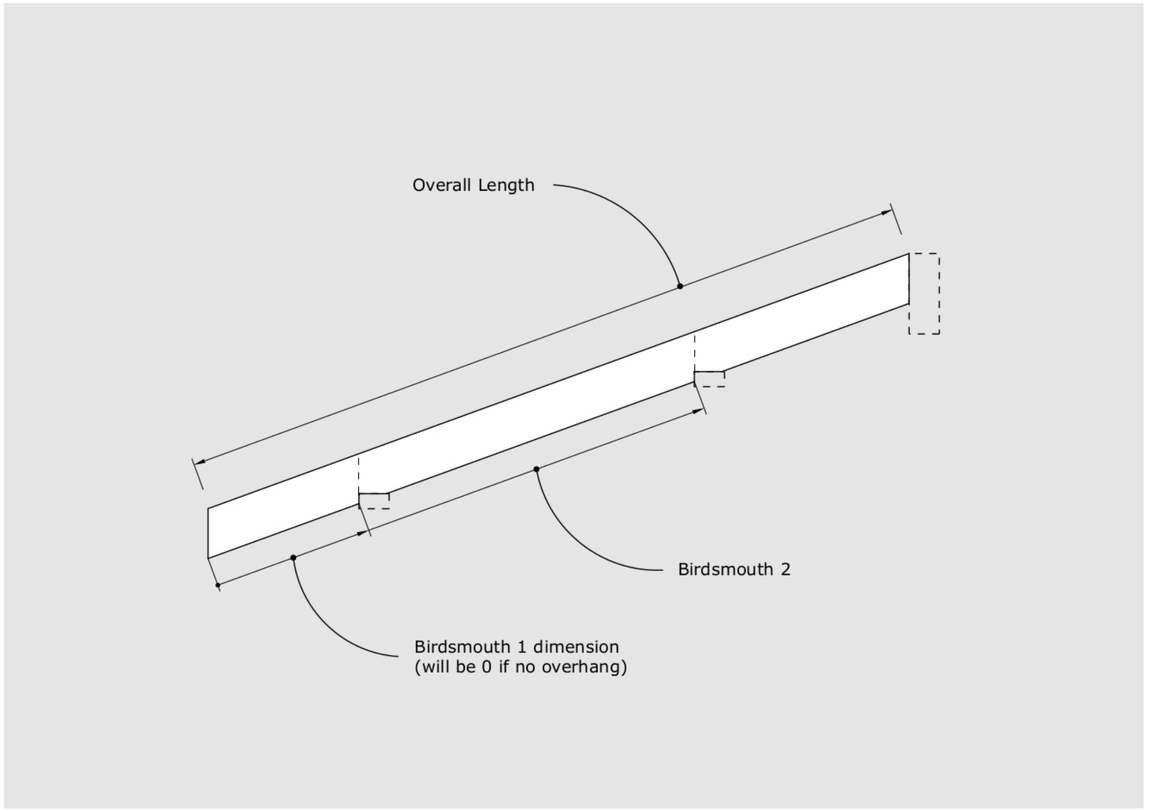

markout wall to ridge or wall plate

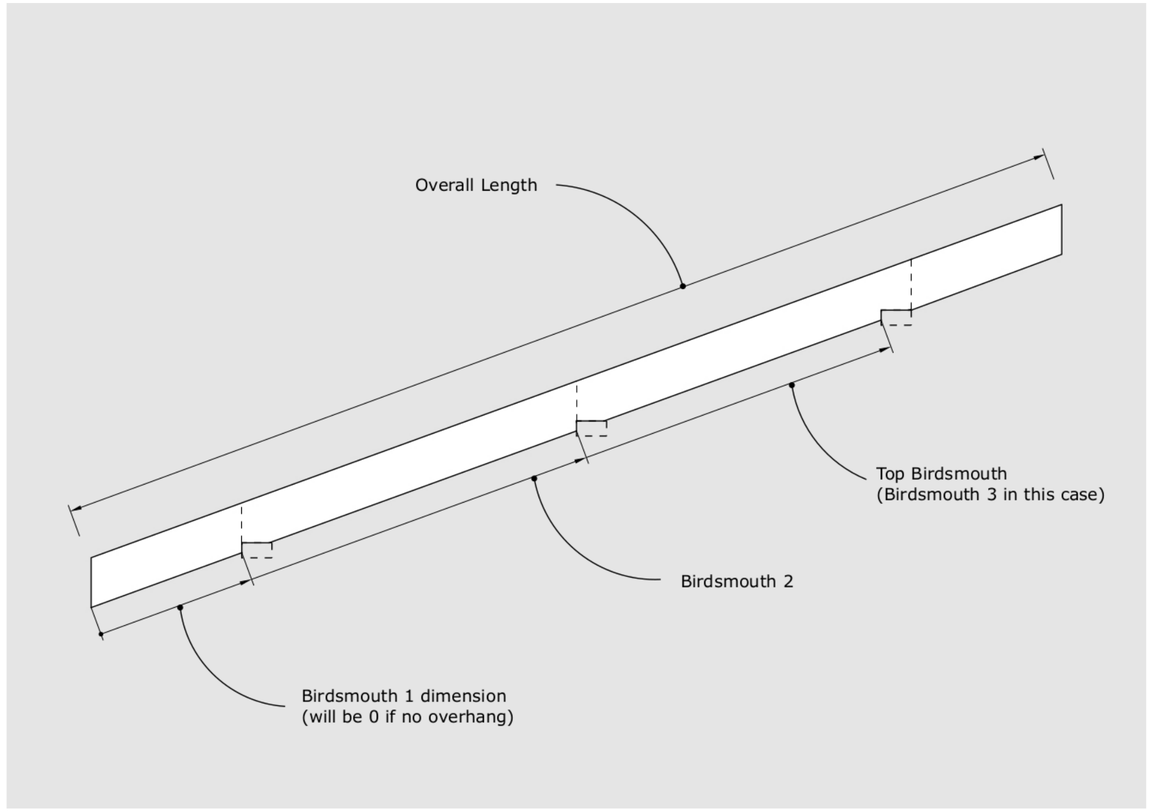

markout over 2 walls