BuildMath

Angle Offset

One worked example, with the maths behind each result - follow it in the app and check it by hand.

© Robert Butwell 2026

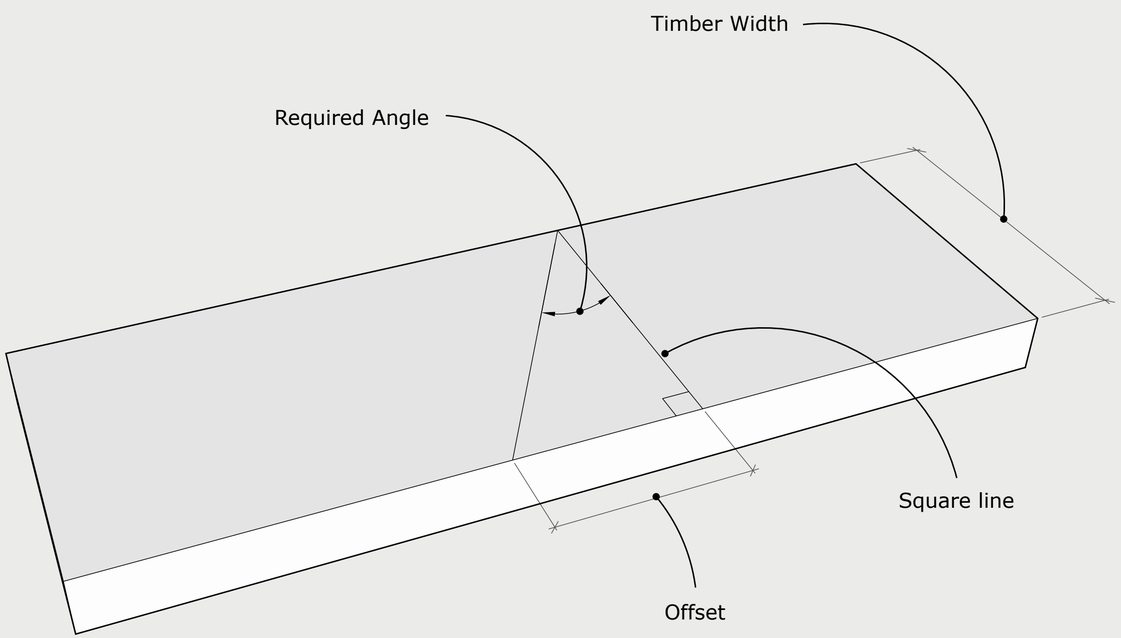

Angle Offset turns an angle into a measurement along the edge, so you can mark it accurately across any width.

A plumb cut or markout on a wide rafter is one use; stair stringers and angles across sheets work the same way.

Offset = width × tan(angle from square)

Note:
To find an angle you don’t know, use the Solve a Triangle calculator.

Inputs - Results

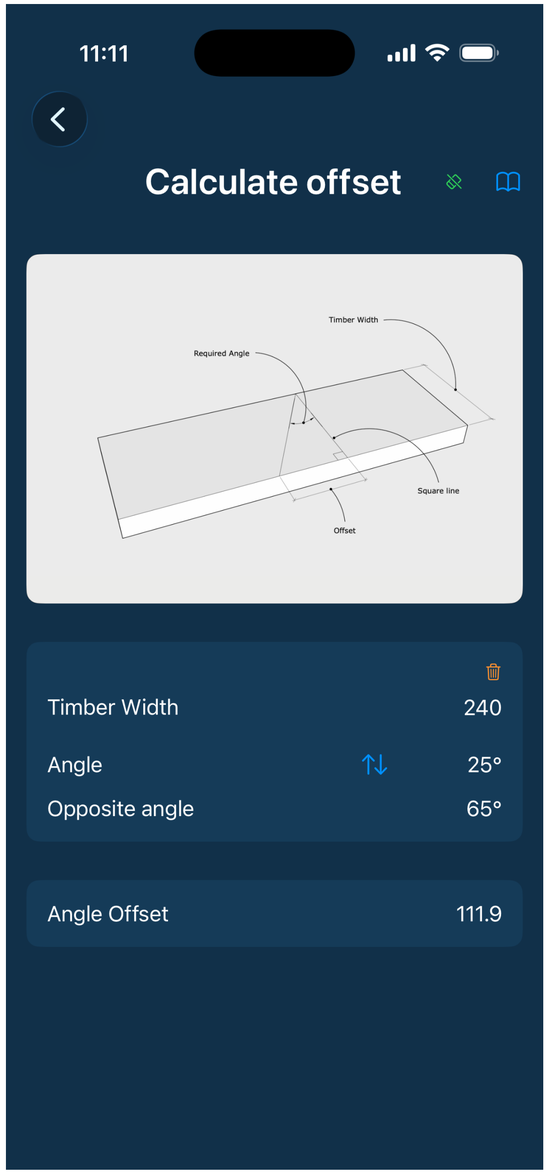

Enter the timber width
Timber Width 240 - the width of the rafter, measured square across it.
Tip: measure the width as accurately as you can; the offset is only as good as the width.

Enter the angle
Angle 25 - the roof pitch, measured from the square line.

The offset
Offset = 240 × tan(25) = 240 × 0.466 = 111.9
Measure 111.9 along the edge from the square line and join the points - that is the 25° plumb cut.

The opposite angle
The app also shows the opposite (complementary) angle: 90° – 25° = 65°.
That is the seat cut angle where the rafter sits on the wall, measured from the same square line.
The swap button makes the opposite value the active value.

Note:
The angle must be less than 90°. At 90° the offset would be endless.

Entering values and recent angles: see Build Math - the basics.